UniFi 6 Long-Range

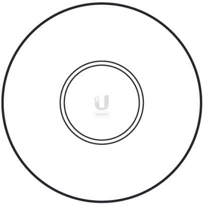

a

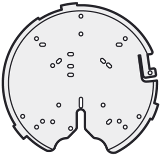

b

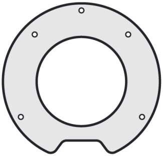

c

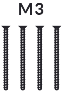

d

e

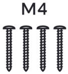

f

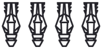

g

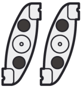

h

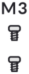

i

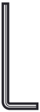

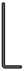

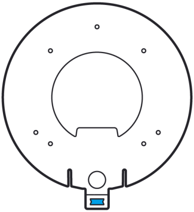

j k l m

1

A

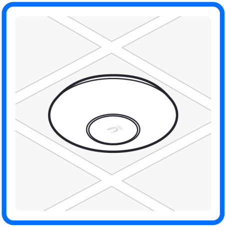

Ø6mm

Ø18mm
(Ø11/16")

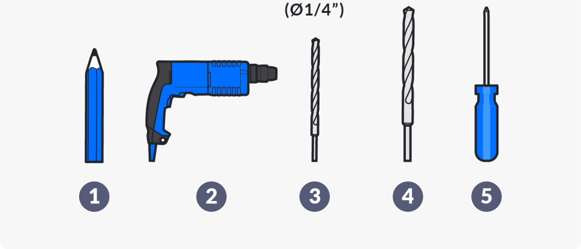

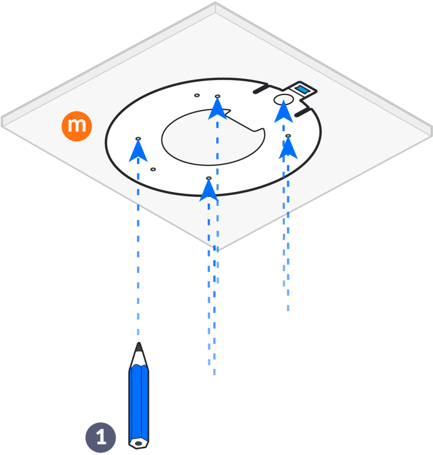

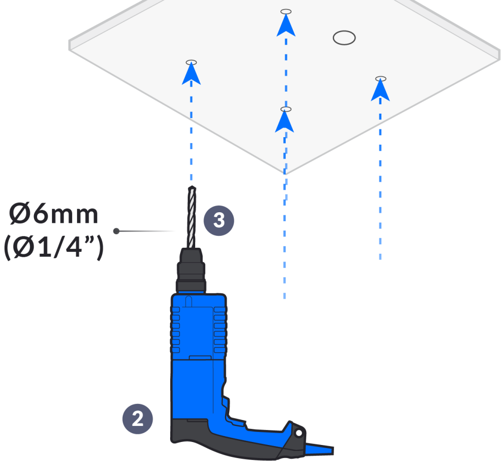

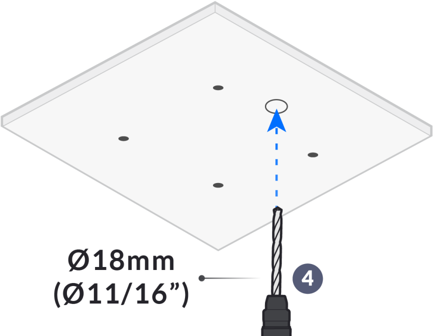
Ø18mm
(Ø11/16”)
4

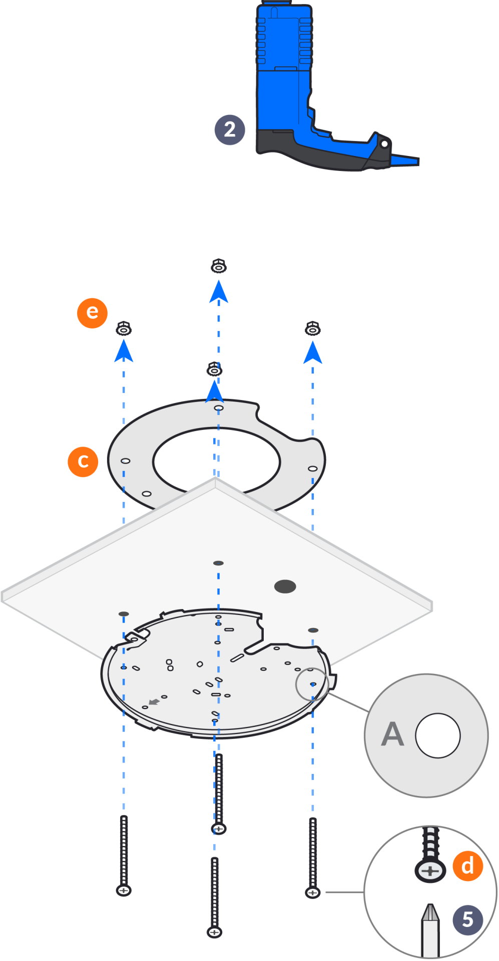

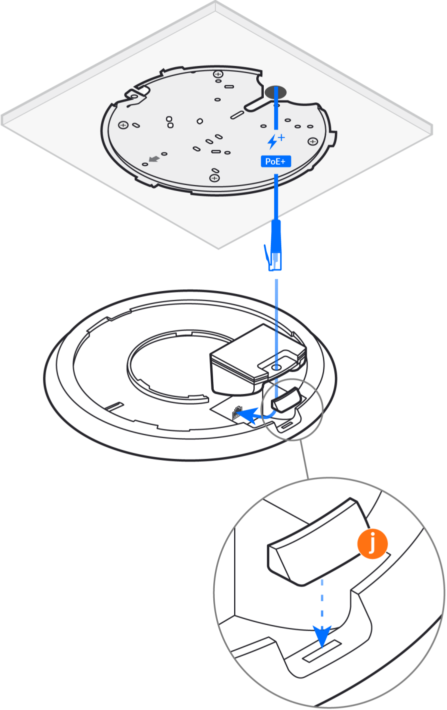

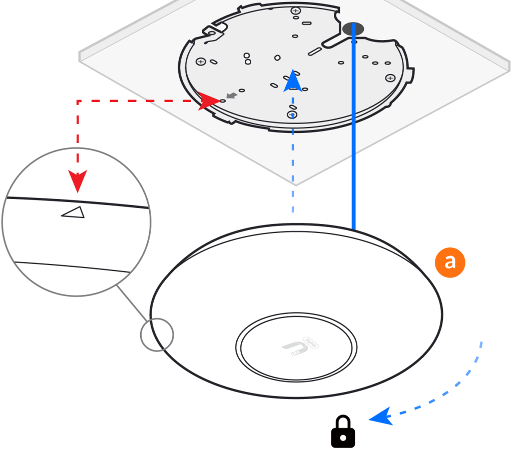

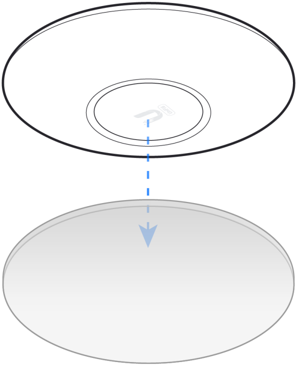

B

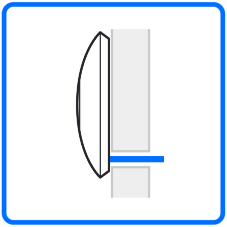

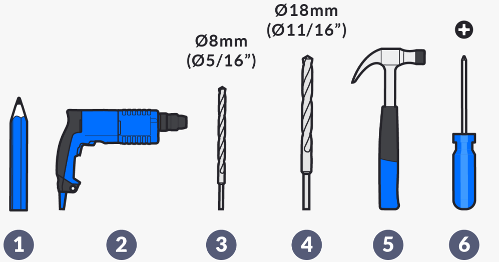
Ø8mm
(Ø5/16”)
Ø18mm
(Ø11/16”)
✚
1
2
3
4
5
6

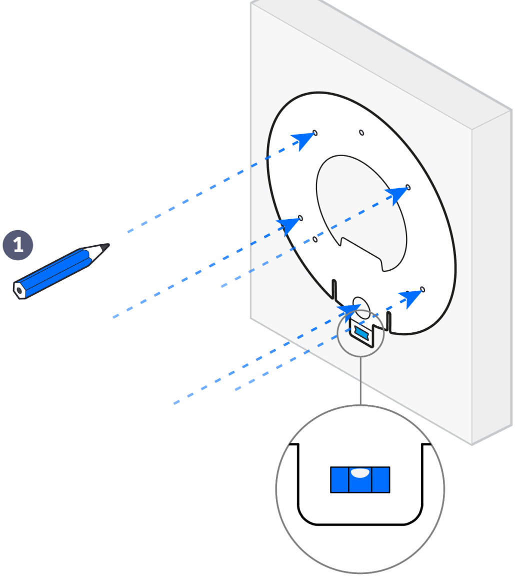

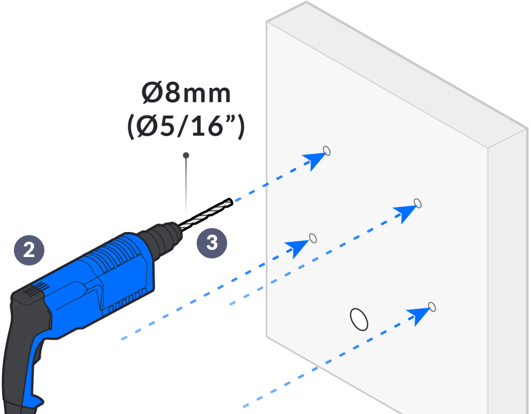
Ø8mm
(Ø5/16”)
2
3

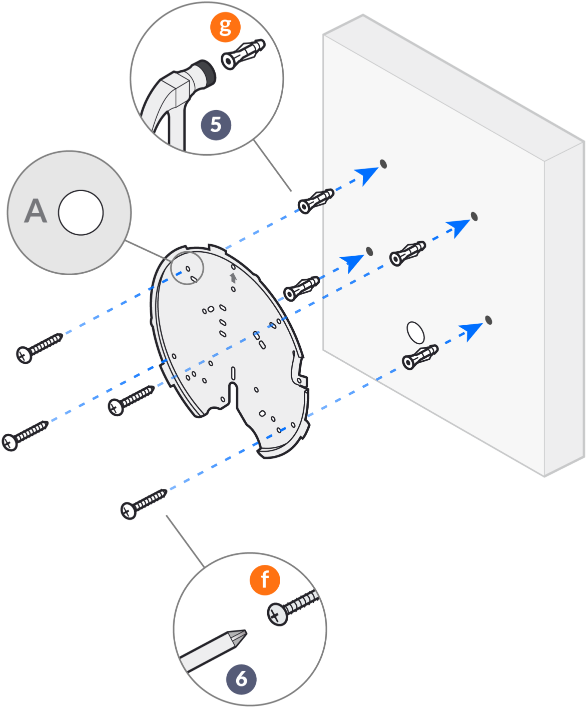

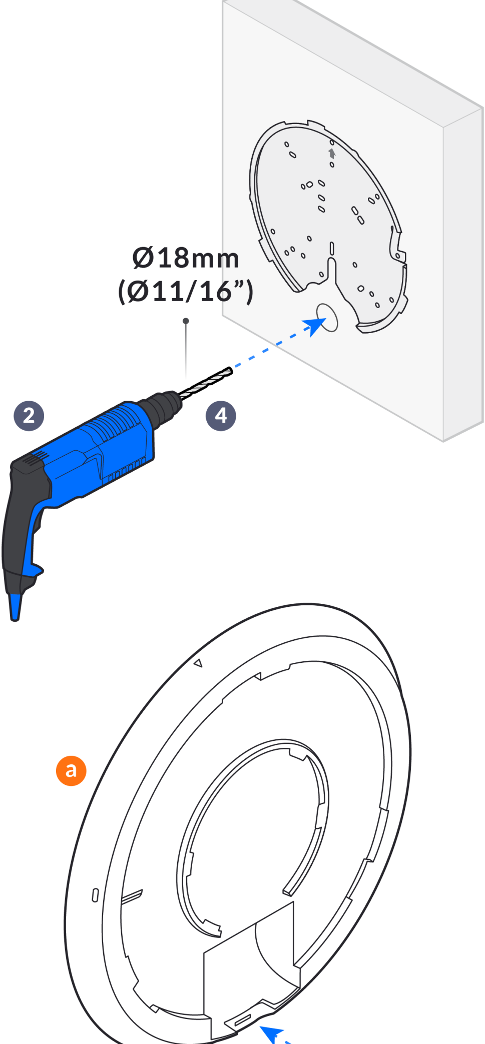
Ø18mm
(Ø11/16”)
2
4
a

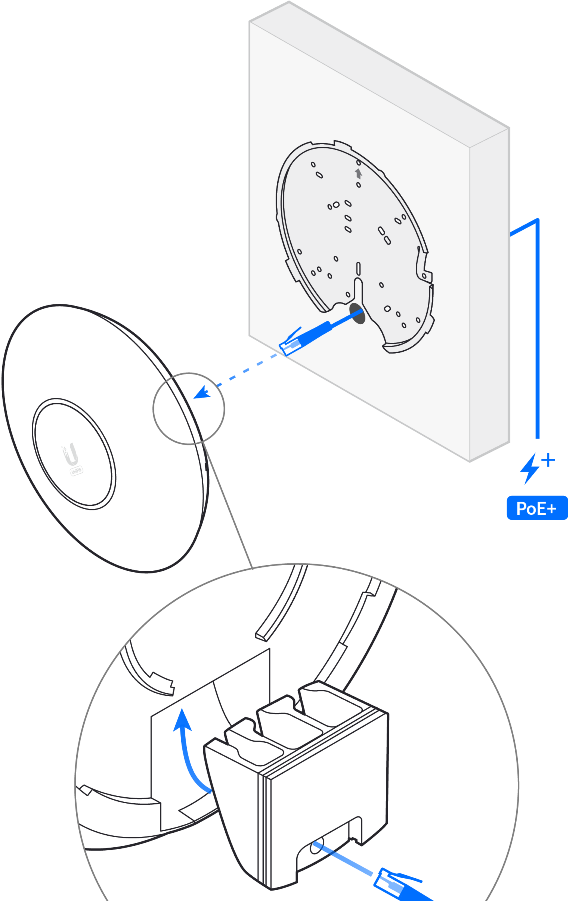

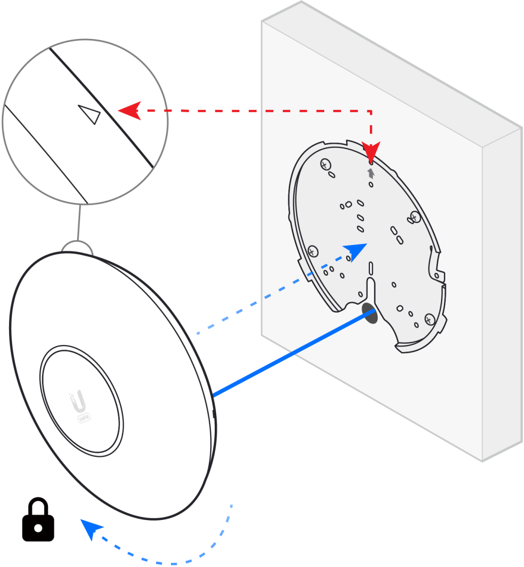

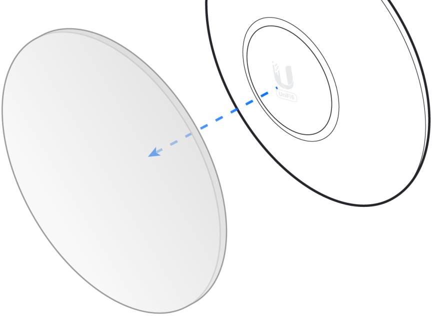

C

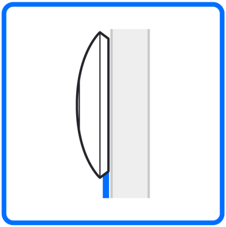

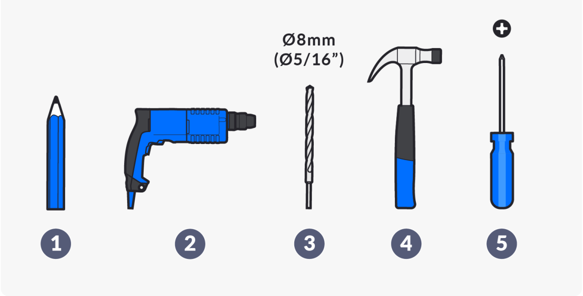
Ø8mm
(Ø5/16")
1
2
3
4
5

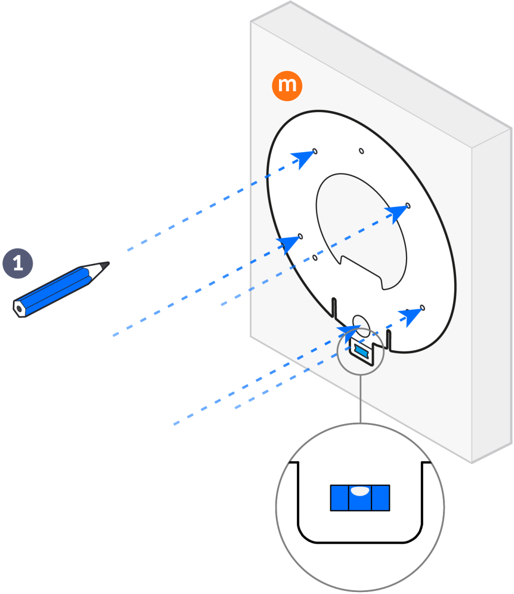

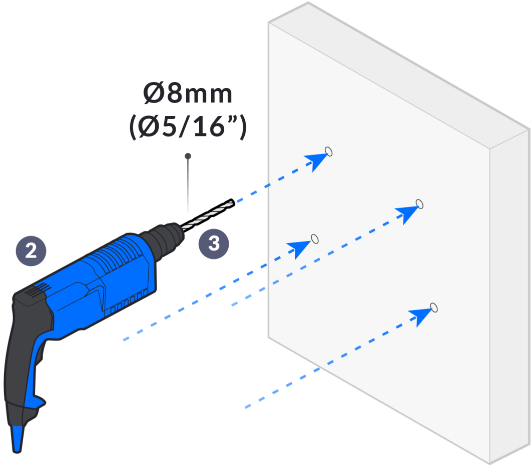
Ø8mm
(Ø5/16”)
2
3

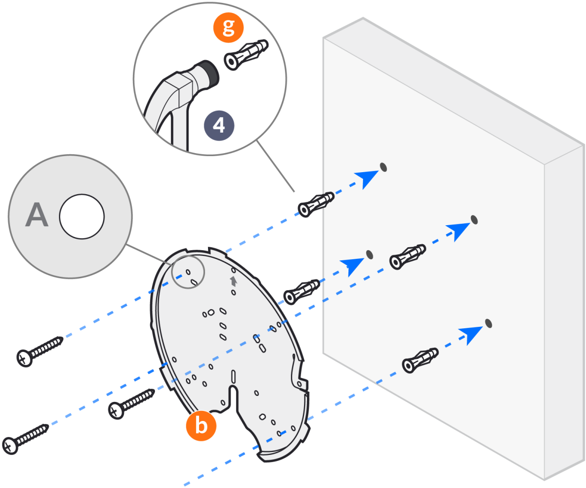

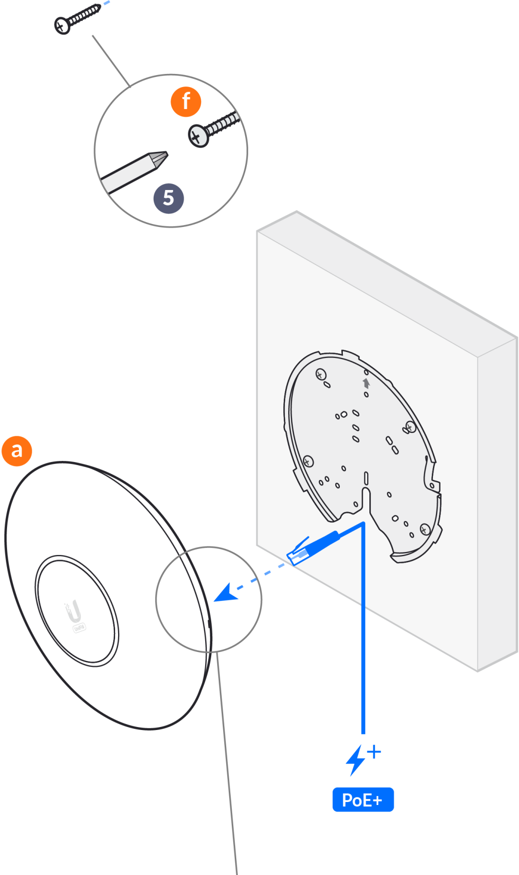

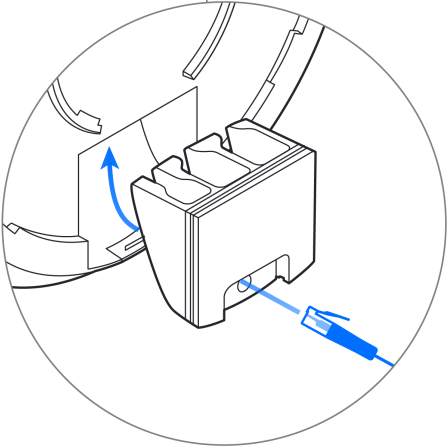

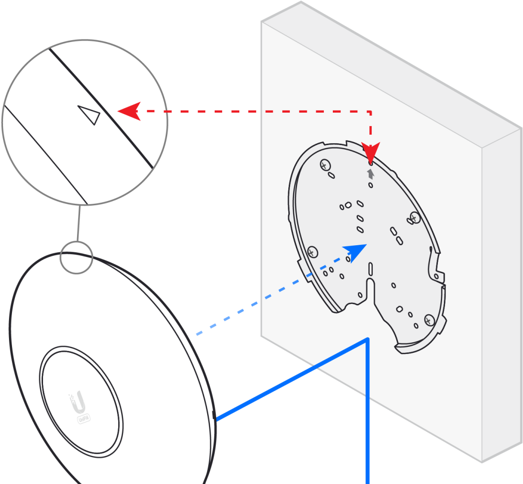

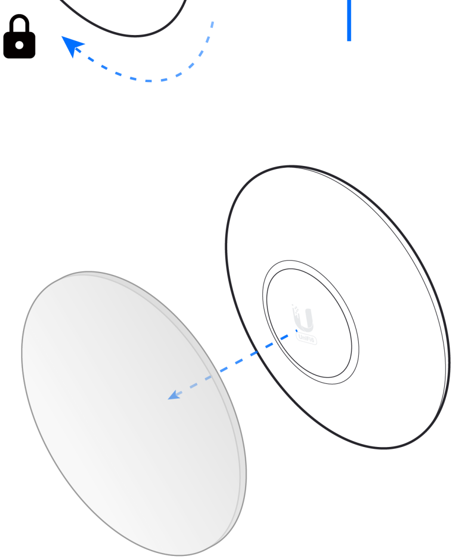

D

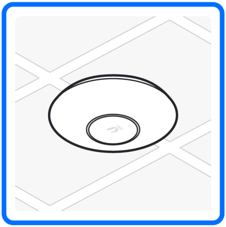

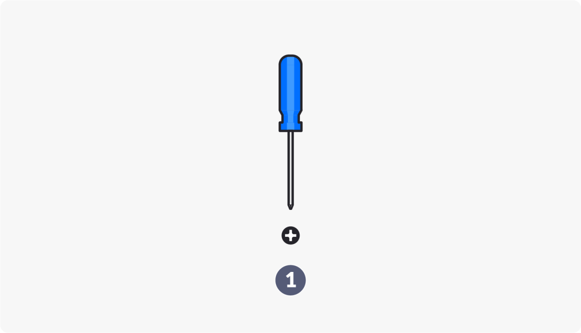

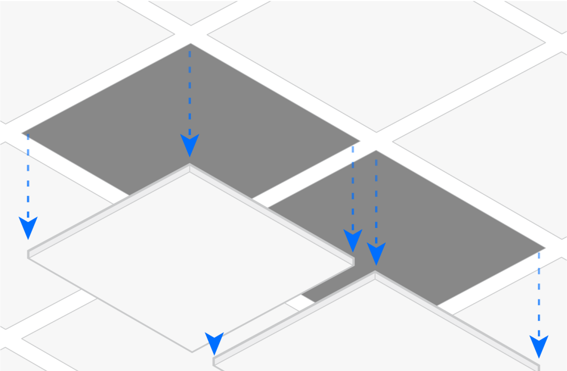

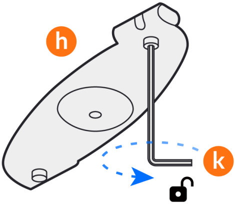

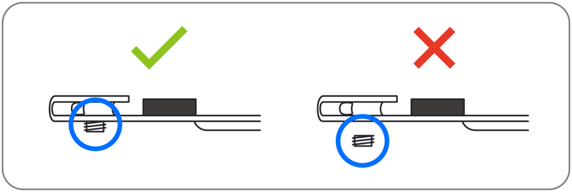

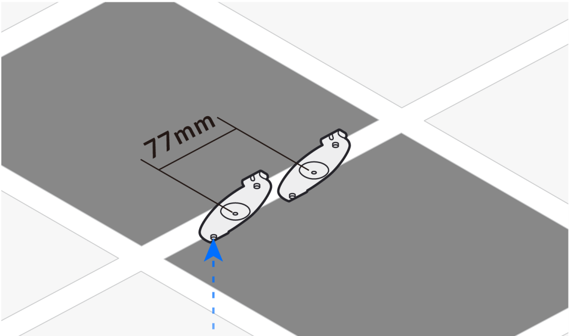

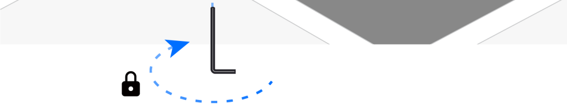

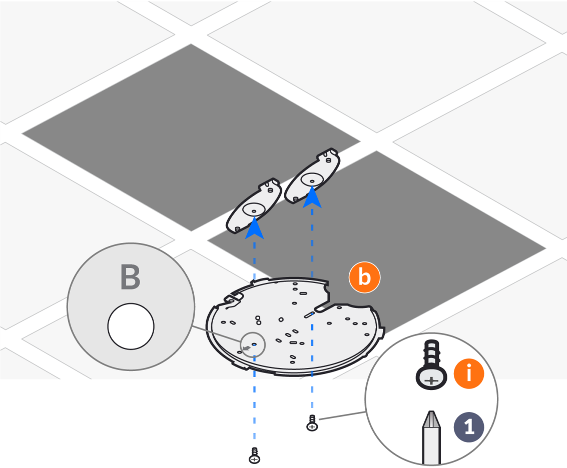

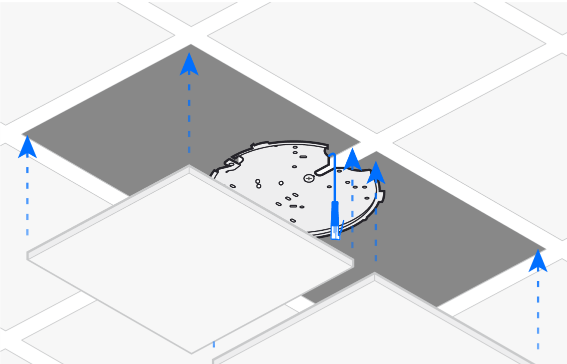

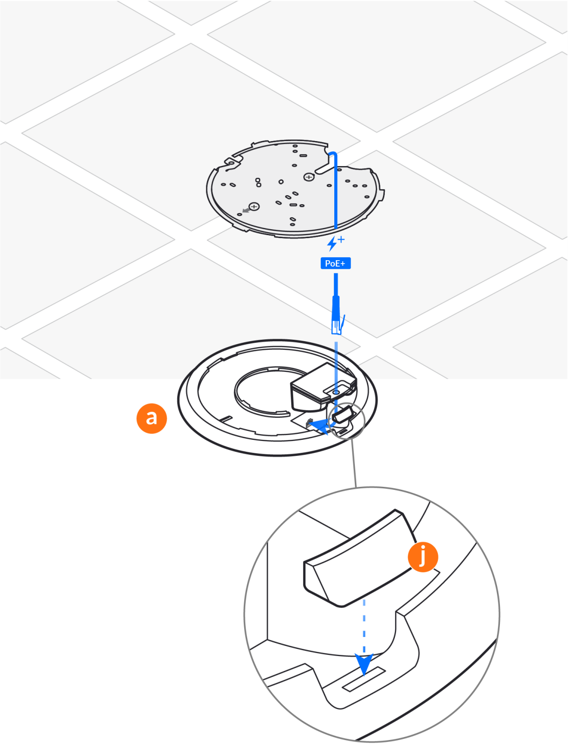

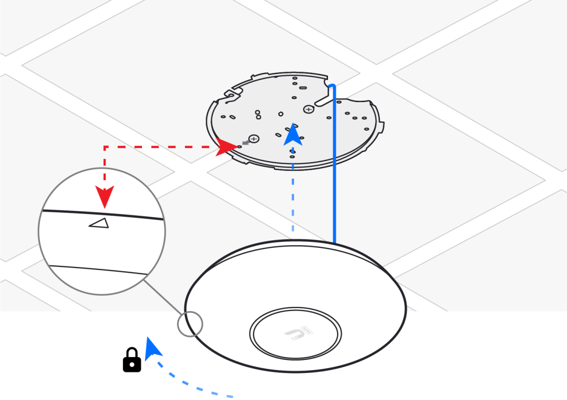

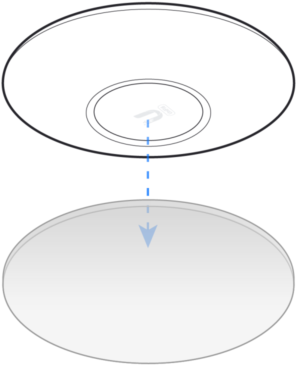

E

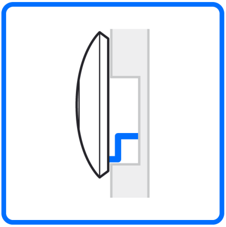

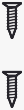

1

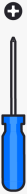

2

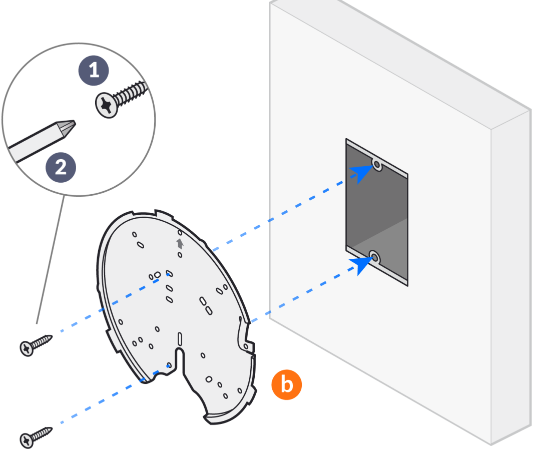

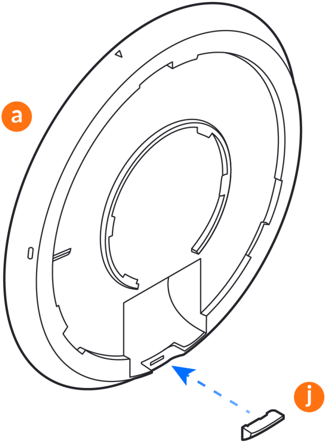

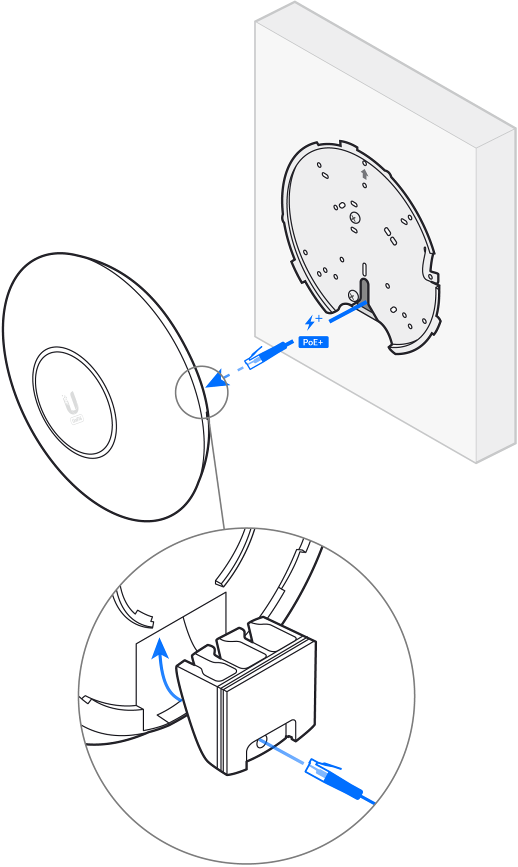

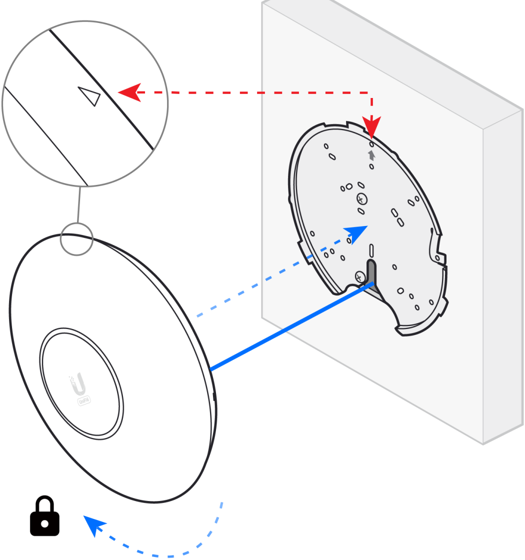

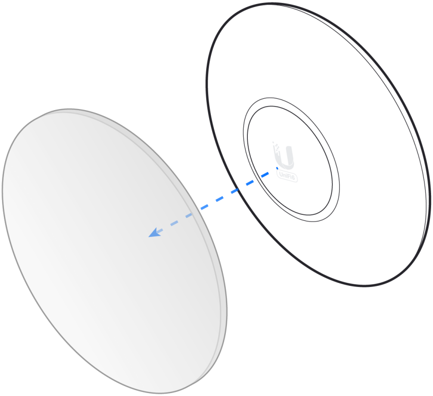

2

A

Internet

Gateway

B

Wi-Fi

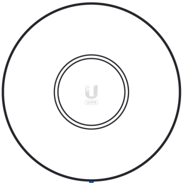

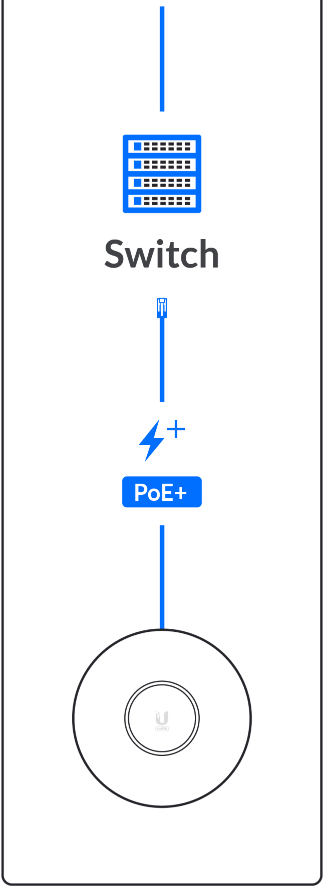

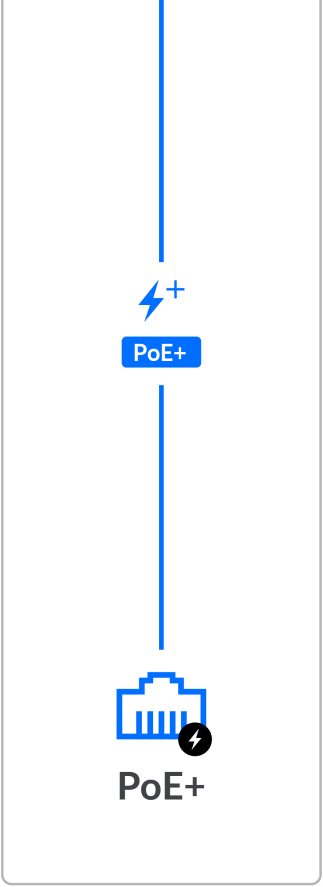

3

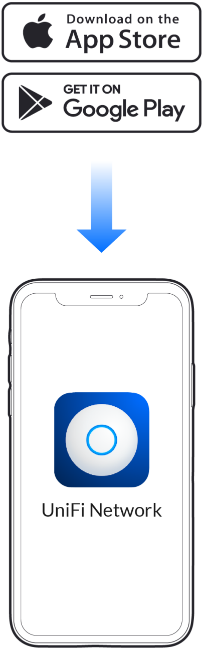
Download on the
App Store
GET IT ON
Google Play
UniFi Network

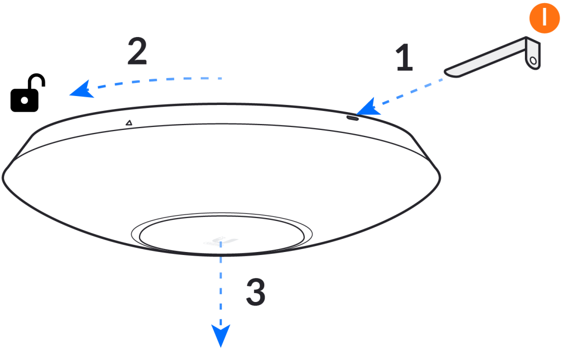

Get Answers
help.ui.com

UI Support

©2021 Ubiquiti Inc. All rights reserved. Ubiquiti, Ubiquiti Networks, the Ubiquiti U logo, the Ubiquiti beam logo, UniFi, and UniFi Network are trademarks or registered trademarks of Ubiquiti Inc. in the United States and in other countriesApp Store and the Apple logo are trademarks of Apple Inc., registered in the U.S. and other countries. Google Play and the Google Play logo are trademarks of Google LLC. All other trademarks are the property of their respective owners.